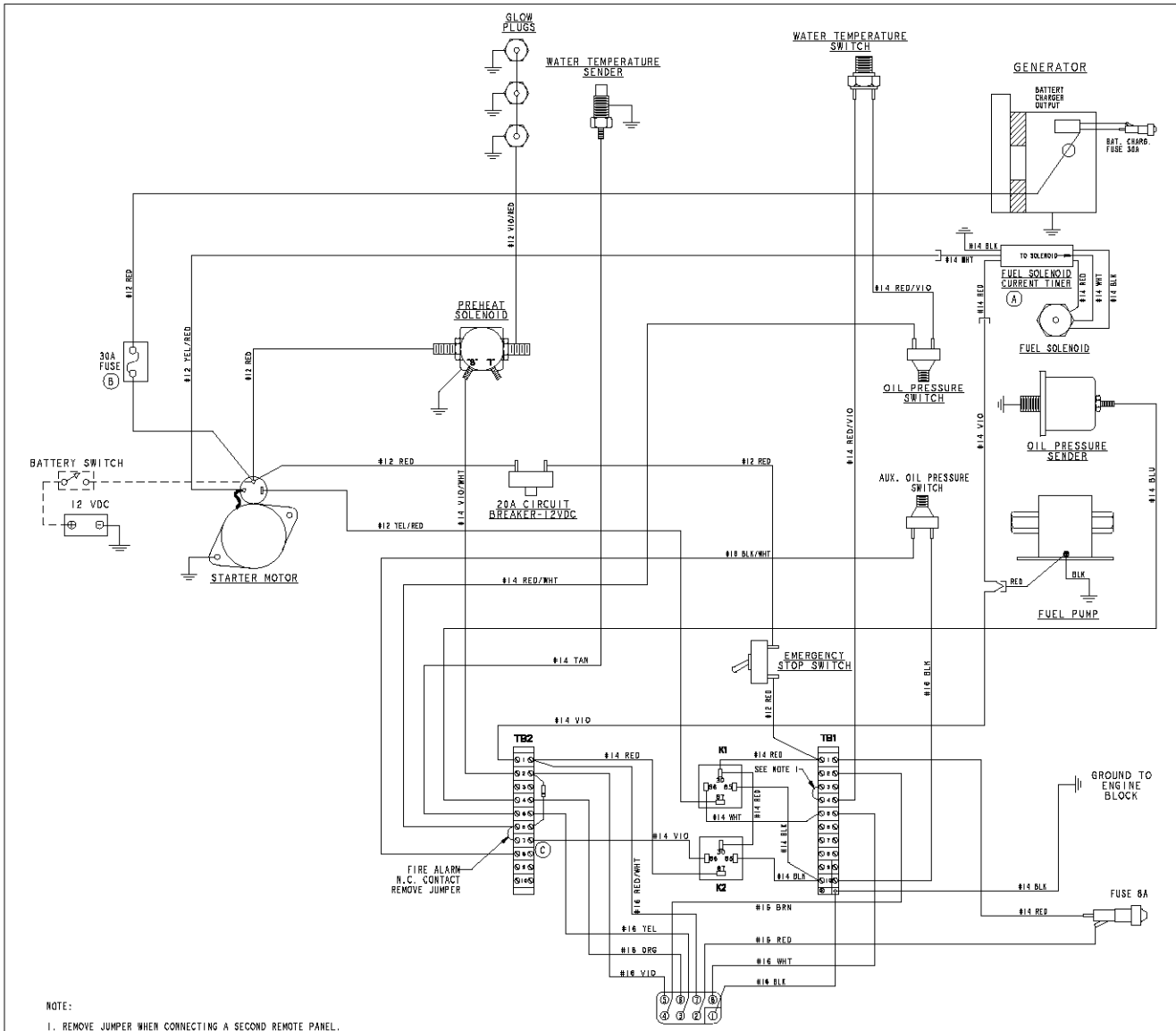

NOTE:

1. REMOVE JUMPER WHEN CONNECTING A SECOND REMOTE PANEL.

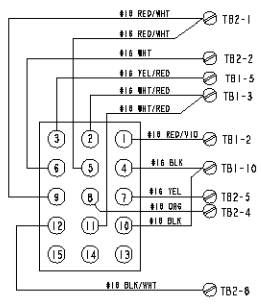

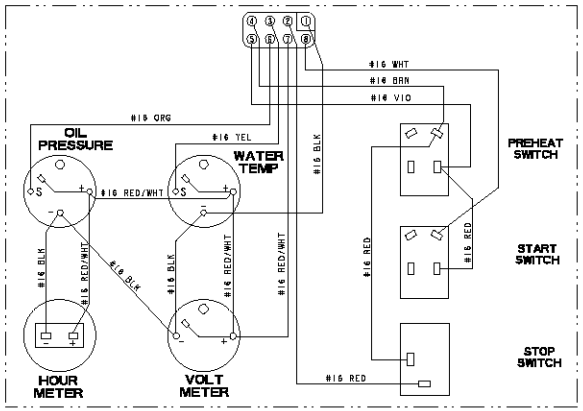

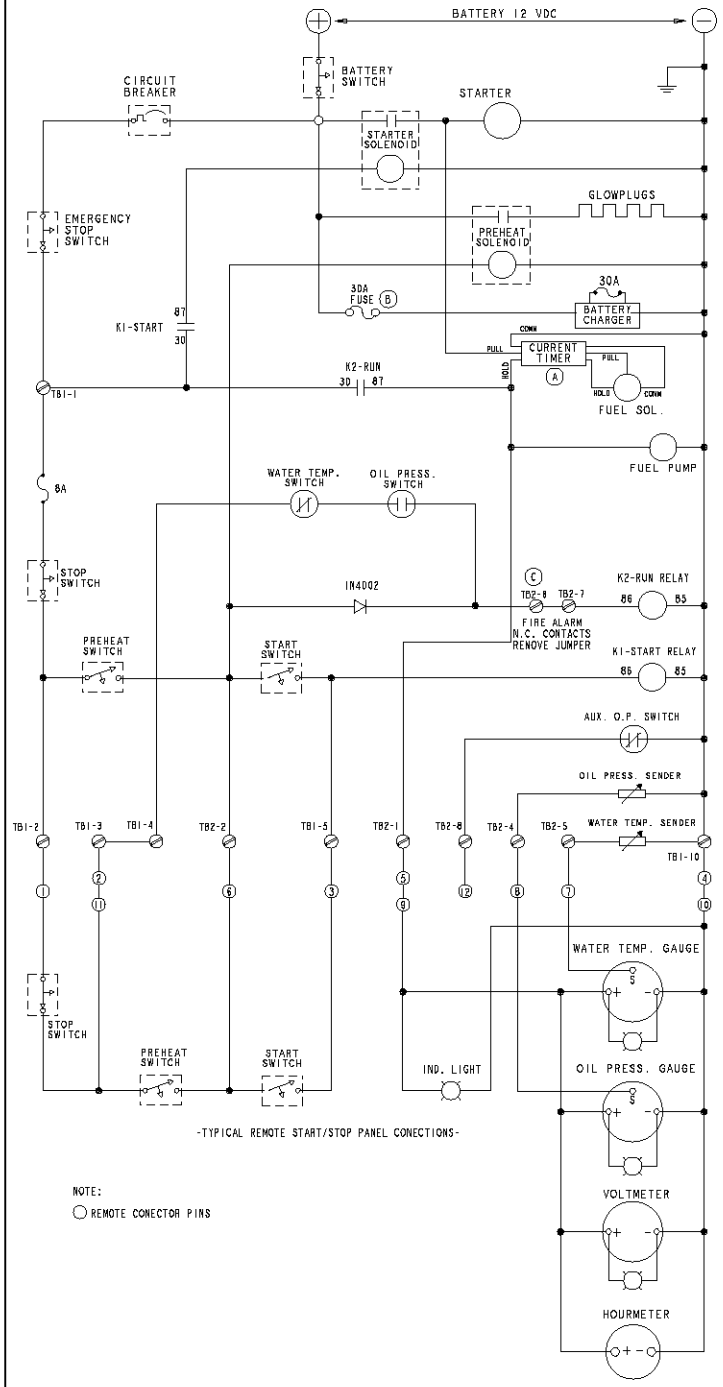

-TYPICAL REMOTE START/STOP PANEL CONECTIONS-

NOTE:

REMOTE CONECTOR PINS

ECO NO.	DATE	REV.	REVISION RECORD	AUTH.	DR.BY
5661	11-3-2004	C	ADDED JUMPER BETWEEN TB2-6&7; K2-86 WAS CONNECTED TO TB2-6.	GA	
5610	8-17-2003	B	ADDED 30A FUSE TO BATTERY CHARGER CONNECTION. REMOVTE BATTERY CHARGER CONNECTION TO STARTER INSTEAD OF CIRCUIT BREAKER	GA	
5062	10/24/01	A	ADDED CURRENT TIMER		TSN

TOLERANCES (UNLESS OTHERWISE NOTED): INCHES / MILLIMETERS — .XX ±.02 / X.X ±.1 — .XXX ±.005 / X.XX ±.05 — ANGLES ±0°

DIMENSIONS: INCHES / MILLIMETERS — TRACE APPLICABILITY

WESTERBEKE CORPORATION
AVON MA. 02322

TITLE: WIRING DIAGRAM/SCHEMATIC, 5.0 BCDBR - SRC

DRAWN BY: RPG — DATE: 10/Mar/00 — REFERENCE: - - -

APPROVED BY: — DATE:

SCALE: NONE — SIZE: E — DRAWING NUMBER: 44742 — REV: C

ART. 1 of 1